Tracer®$_{VM}$

Operating Instructions

Applies to VM Flowmeter models.

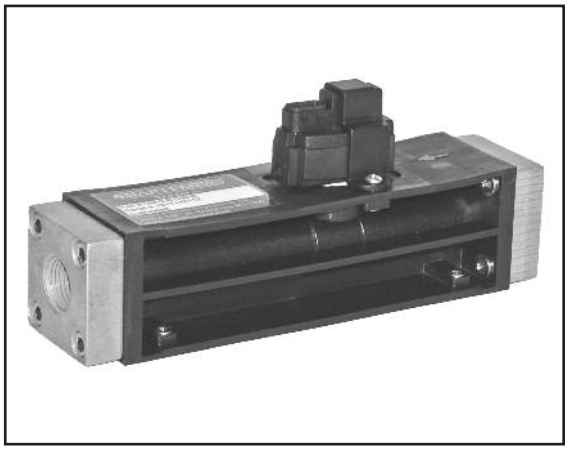

General

The Tracer$_{VM}$ Electronic Flowmeter is a non-display flow and temperature sensor that provides a 0.5 - 3.5 Volt output for flow and 0.5 - 4.1 Volt output for temperature. It is flow-direction specific. Refer to the arrow on the body for correct flow direction. Flow in the opposite direction of the arrow will yield inaccurate voltage output. Flow sensor technology is vortex shedding behind a bluff body.

Specifications

Flow Ranges and Equations

Available Flow Ranges		
Body Size	Range (LPM)	Range (GPM)
3/8" & 1/2"	1 to 15	.3 to 4
3/8" & 1/2"	2 to 40	.5 to 10.6
3/4" & 1"	5 to 100	1.3 to 26.4
1" & 1-1/2"	10 to 200	2.6 to 52.8

(V = Voltage)

1-15 LPM	(LPM) = [(14/3) * V] - (4/3)
.3 to 4 GPM	(GPM) = [1.233 * V] - 0.352
2-40 LPM	(LPM) = [(38/3) * V] - (13/3)
.5 to 10.6 GPM	(GPM) = [3.347 * V] - 1.145
5-100 LPM	(LPM) = [(95/3) * V] - 10.833
1.3 to 26.4 GPM	(GPM) = [8.365 * V] - 2.862
10-200 LPM	(LPM) = [(190/3) * V] - (65/3)
2.6 to 52.8 GPM	(GPM) = [16.731 * V] - 5.724

0.35V output for all ranges is equal to zero flow

Temperature Equations

Temp (°C) = [(100/3) * V] - (50/3)
Temp (°F) = (60 * V) + 2

Operating

Operating Pressure.....10.3 bar max. (150psi max.)
Output signals: ..... Ratiometric
Flow Signal ..... 0.5 - 3.5V (zero at 0.35V)
Flow Accuracy .....±1.5% of Full Scale
Temperature Range.....0°C to 100°C (32°F to 212°F)
High Temp Models.....0°C to 120°C (32°F to 248°F)
Temperature Signal ..... 0.5 - 4.1V
Temperature Accuracy .....±0.5°C
Power Consumption..... < 50mW
Load Impedance..... > 10k

Component Materials

Sensing Element..... Silicone-Based MEMS Sensor
Seal (sensor to housing)..... EPDM
Insert..... PPA 40 GF
3/8" & 1/2" Body Size.....Glass-Filled Nylon Flow Body with Brass or Nylon End Caps
3/4" thru 1-1/2" Body Size .....Anodized Aluminum or Stainless Steel Flow Body
Cable 4-Conductor, 24AWG 2.9M (9.5ft)

Power Requirements

Power Supply 5VDC ±5% (external)
max. 10 mV ripple, 50 Hz
min. output current 10mA
separated from hazardous live circuitry by double or reinforced insulation
power limitation: 150VA; current limitation: 8A

Directives

Flow sensors are in conformity with these Council directives on the approximation of the laws of the EC member states:

- Low Voltage Directive (2006/95/EC)
  - Standards used: EN 61010-1:2001
- EMC Directive (2004/108/EC)
  - Standards used: EN 61326-1:2006 and 61326-2-3:2006

Smartflow Vortex flow sensors fall under Article 3, §3 of PED Directive 97/23/EEC and are therefore not required to be CE-marked according to this directive.

burger & brown engineering, inc.

4500 E 142nd Street • Grandview, MO 64030 • Tel. (816) 878-6675 • Fax (816) 878-6683 • www.smartflow-usa.com

Installation Instructions

Pipe Configuration
Best flow rate accuracy is achieved when plumbing a straight run of pipe equal to 10 pipe diameters on the inlet side of the Tracer flowmeter and a straight run of pipe equal to 5 pipe diameters on the outlet side of the flowmeter.
Use appropriate pipe sealant to prevent leakage on inlet and outlet sides of the flowmeter.

Flow and Mounting Direction
The Tracer flowmeter must be installed with the flow arrow pointing the same direction as the process flow. Flow in the opposite direction of the arrow will yield inaccurate voltage output. The meter may be installed in any orientation, horizontally, vertically, or at an angle. The presence of air bubbles will create an inaccurate analog output.

Power
Attach the power and switching connections to the bare wires of the cable according to the chart at right. Individual wires are 24AWG stranded copper. Attach 5VDC power to the unit for correct operation.

CAUTION

Power supply other than 5VDC may damage the sensor electronics and void the warranty.

EMI/RFI Interference
Care should be taken to route power and signal cable away from motors and pumps. Signal integrity may be adversely affected by close proximity of the wiring to machinery producing high frequency emissions.

Cable
Maximum effective cable length is 2.9M (9.5ft) as supplied. Splicing extra length to the cable is not recommended.

Wiring Diagram

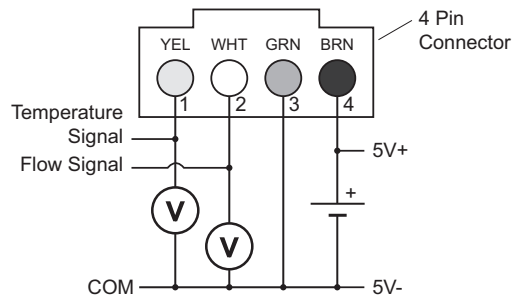

Wire Color	Function
Yellow	Temperature Analog Voltage Output
White	Flow Analog Voltage Output
Green	Common (0V or Ground)
Brown	Power Input (+5VDC)

Maintenance Instructions

Copper Plumbing Alert
DO NOT connect an aluminum body flowmeter directly to copper plumbing. Galvanic corrosion is very likely to occur. Stainless steel body material is strongly recommended for this application. Contact the factory for more information.

Limited Warranty

Seller warrants that this product supplied will conform to the description herein stated and that the product will be of standard quality. This is the sole warranty made by Seller with respect to this product. Seller expressly disclaims any other express or implied warranties, including, but not limited to, the implied warranty of merchantability and the implied warranty of fitness for a particular purpose.
Seller shall not be liable for any cost or damages, whether direct, incidental or consequential, including, but not limited to, any injury, loss or damage resulting from the use of this product, regardless of whether any claim for such cost or damages is based on warranty, contract, negligence, tort or strict liability. The sole liability of Seller is limited to repairing or replacing this product.
this warranty shall not apply to any products that have been repaired or altered by anyone other than Seller. The warranty shall not apply to any products subject to misuse due to common negligence or accident, nor to any products manufactured by Seller which are not installed or operated in accordance with the printed instructions of Seller or which have been operated beyond the rated capacity of the goods. Seller states that the product's useful safe life is 5 years. Actual life may vary widely depending on operating environment such as temperature, pressure, and chemical exposure. Users are cautioned to refer to instructions for operating limits.