SMARTFLOW®

MANIFOLDS CATALOG

- Aluminum
- Stainless Steel
- Duoflow® Aluminum
- High Pressure and Temperature Stainless Steel
- Custom Assembly Specifications

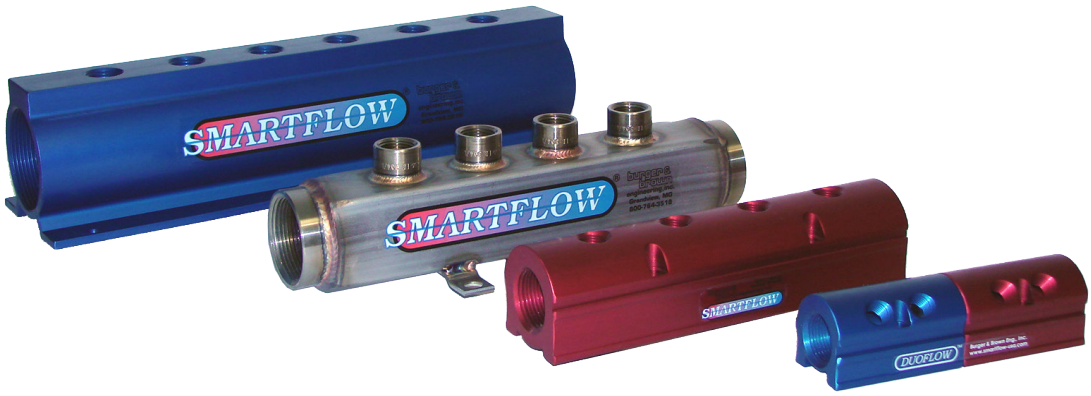

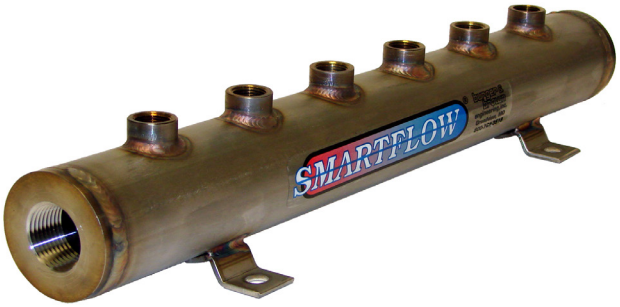

Burger & Brown ENGINEERING
4500 E 142nd Street
Grandview, MO 64030 USA
Tel: 816-878-6675
www.smartflow-usa.com

3D CAD Data is available on demand

ManifoldBuilder.com

SMARTFLOW® Tools of the Trade

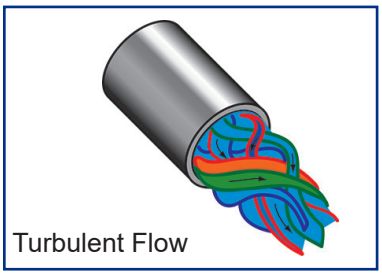
Turbulent Flow

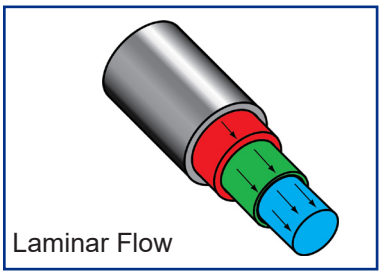
Laminar Flow

Turbulent Flow Basics

Turbulent water flow is much more efficient at removing heat in a cooling system than water flowing under laminar conditions. Once turbulent flow is achieved, increasing the flow rate does not significantly improve the cooling rate of the system.

In molding applications, many mold operators try to maximize the flow of water through their cooling systems to ensure turbulent flow. Doing so increases energy costs for pumping more water than necessary through the system. This practice may also limit the amount of cooling water available for cooling additional molds on the same cooling systems circuit.

By insuring turbulent flow using FCI (Fluid Characteristic Indication) Technology, less water can be used in the molding process, saving precious resources.

Try our on-line Turbulent Flow Calculator:
www.SMARTFLOW-USA.com/turbulent-flow-rate-calculator

Turbulent Flow Reference Charts

Approximate Minimum Flow required for turbulence in drilled water passages based on Reynolds Number of 4000

Passage Diameter	Nominal Pipe Size	Minimum Flow in GPM by Temperature		
		40°F	120°F	200°F
.44"	1/4"	0.88	0.31	0.18
.59"	3/8"	1.16	0.42	0.24
.72"	1/2"	1.41	0.51	0.29

Passage Diameter	Nominal Pipe Size	Minimum Flow in LPM by Temperature		
		4°C	49°C	93°C
11mm	1/4"	3.3	1.2	0.7
15mm	3/8"	4.4	1.6	0.9
18mm	1/2"	5.3	1.9	1.0

Expected Rates of Flow

60°F (15°C) Water through Schedule 40 Pipe

Nominal Pipe Size	Flow Rate	
	Gallons per Minute	Liters per Minute
1/4"	3	11
3/8"	6	23
1/2"	10	38
3/4"	15	57
1"	25	95
1-1/4"	45	171
1-1/2"	60	228
2"	100	380
3"	230	870

Sizing Up Manifolds

The best manifold design provides as much water flowing through all ports as flowing through the end.

# of Ports x Flow Rate ≤ Flow Rate of the Manifold End

Using the tables on this page, it is possible to choose a well-balanced manifold. If you are pushing 4 gallons per minute through your ports, you will need 3/8" minimum port size. If you have 6 cooling circuits to feed, you need 24 gallons per minute (6 ports x 4 GPM) flowing into your manifold from a 1" connection on the end.

However, if you are optimizing water using flow regulators to balance each circuit while providing Turbulent Flow, you can supply more ports with a 1" manifold. Thereby saving cooling capacity for other presses down the line. We recommend a 2x safety factor when figuring Turbulent Flow Rate.

Burger & Brown Engineering recommends that flow regulators are installed on the return side of a cooling water loop for best performance.

SMARTFLOW® Aluminum Manifolds

General Description

Smartflow aluminum manifolds are constructed from unique extruded material, precision machined, then anodized for corrosion protection. Many manifold sizes are stocked, however custom manifolds can be made to your specifications.

Standard red and blue colors denote supply and return for cooling water lines. 3/4", 1", and 1-1/2" manifolds are equipped with dovetail feature, pre-drilled mounting holes, and bolts for ease in pairing and installation. Each manifold with NPT threads includes one bronze end plug.

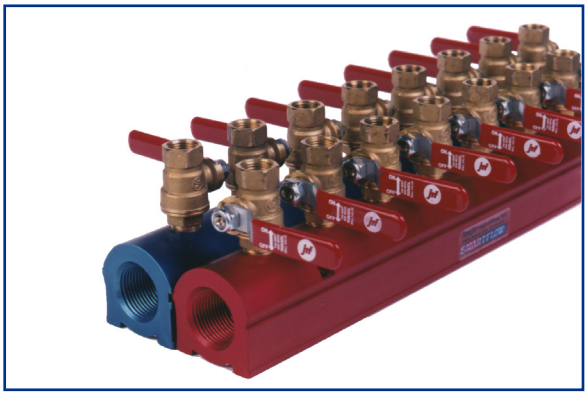

Features and Benefits

- **One-Piece Extruded Aluminum Construction** is lightweight with long-lasting durability.
- **Quality Anodizing** protects the manifolds from corrosion and signifies manifold function.
- **Different Port Size Options** provide connection flexibility.
- **Bronze End Plug** is included for customer convenience (NPT only).
- **Pre-Drilled Mounting Holes** make the manifolds ready to install.
- **3/4 thru 1-1/2 manifolds dovetail together** for ease in mounting.
- **Common Manifold Configurations Stocked** to provide quick delivery.

Specifications

Material.....Aluminum (6000 Series)
Max. Pressure ..... 150 psi (10 bar)
Max. Temperature..... 300°F (149°C)
Anodizing.....Mil Spec Type II Class 2
Standard Colors.....Red, Blue
Optional Colors..... Black, Green, Gold, Clear

Assembly

Smartflow aluminum manifolds are the platform for control of cooling water lines in most types of industrial process cooling. Injection molding is one example and our particular area of expertise. Flowmeters, Flow Regulators, Ball Valves, Quick Disconnect Fittings and more can be added to the manifolds to improve functionality and process control. See page 12 for ordering information.

Custom Manifolds

Special ports sizes and locations are possible with Smartflow aluminum manifolds. All fabrication is done from extruded material at our factory in Kansas City. Contact your distributor for price and delivery on custom manifolds.

3D CAD Data is available on demand at
www.MANIFOLDBUILDER.com

ManifoldBuilder

SMARTFLOW® 3/4" Aluminum Manifolds

Model Number (manifold only, see page 12 to add port valves, quick connects and flowmeters)

6SA - 8 - 3 - 2 - Y

Supply Threads

NPT	**6SA**
British Parallel	**6BSA**
British Taper	**6TSA**

Number of Ports

4 to 16

Port Sizes

1/4"NPT	**2**
1/4"BSPP	**2B**
1/4"BSPT	**2T**
3/8"NPT	**3**
3/8"BSPP	**3B**
3/8"BSPT	**3T**

Port Locations

0	Left Side
1	Left 45°
2	Center
3	Right 45°
4	Right Side

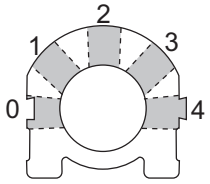

Color

Y	Red
Z	Blue

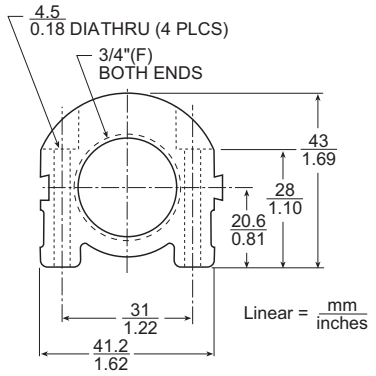

3/4" Manifold Profile

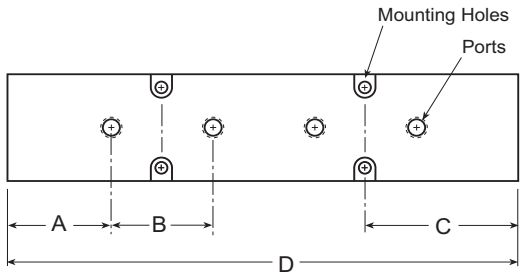

Stocked 3/4" Manifolds										
Number of Ports	1/4" Ports **A** = 38.1mm/1.5", **B** = 38.1mm/1.5" **C** = 57.2mm/2.25"					3/8" Ports **A** = 38.1mm/1.5", **B** = 50.8mm/2.0" **C** = 63.5mm/2.5"				
	model number	length (**D**)		weight each		model number	length (**D**)		weight each	
		mm	in.	kg	lbs.		mm	in.	kg	lbs
4	6SA-4-2-2	190	7.5	0.5	1.1	6SA-4-3-2	229	9	0.6	1.4
6	6SA-6-2-2	267	10.5	0.7	1.6	6SA-6-3-2	330	13	0.9	2.0
8	6SA-8-2-2	343	13.5	0.9	2.0	6SA-8-3-2	432	17	1.2	2.6

Contact your distributor for custom manifolds.

Design and specifications are subject to change without notice.
See page 19 for manifold testing and use.

Galvanic corrosion may occur in anodized aluminum components when installed in electrical connection with more noble metals such as copper. Use appropriate installation practices.

SMARTFLOW® 1" Aluminum Manifolds

Model Number (manifold only, see page 12 to add port valves, quick connects and flowmeters)

8SA - 16 - 3 - 2 - Y

Supply Threads

NPT	**8SA**
British Parallel	**8BSA**
British Taper	**8TSA**

Number of Ports

4 to 16

Port Sizes

1/4"NPT	**2**
1/4"BSPP	**2B**
1/4"BSPT	**2T**
3/8"NPT	**3**
3/8"BSPP	**3B**
3/8"BSPT	**3T**
1/2"NPT	**4**
1/2"BSPP	**4B**
1/2"BSPT	**4T**

Port Locations

0	Left Side
1	Left 45°
2	Center
3	Right 45°
4	Right Side

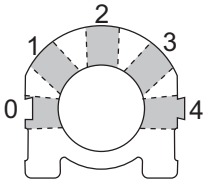

Color

Y	Red
Z	Blue

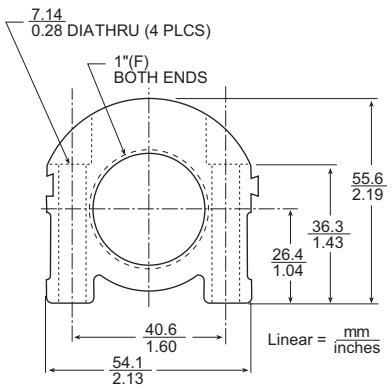

1" Manifold Profile

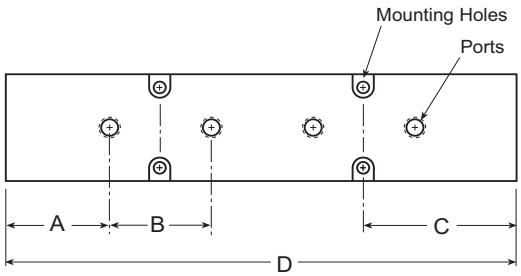

Stocked 1" Manifolds										
Number of Ports	1/4" Ports **A** = 38.1mm/1.5", **B** = 38.1mm/1.5" **C** = 57.2mm/2.25"					3/8" Ports **A** = 38.1mm/1.5", **B** = 50.8mm/2.0" **C** = 63.5mm/2.5"				
	model number	length (**D**)		weight each		model number	length (**D**)		weight each	
		mm	in.	kg	lbs.		mm	in.	kg	lbs.
4	8SA-4-2-2	190	7.5	0.9	2.0	8SA-4-3-2	229	9	1.1	2.4
6	8SA-6-2-2	267	10.5	1.3	2.8	8SA-6-3-2	330	13	1.6	3.5
8	8SA-8-2-2	343	13.5	1.6	3.6	8SA-8-3-2	432	17	2.1	4.6
10	8SA-10-2-2	419	16.5	2.0	4.5	8SA-10-3-2	533	21	2.6	5.7
12	8SA-12-2-2	495	19.5	2.4	5.3	8SA-12-3-2	635	25	3.1	6.8
16	8SA-16-2-2	648	25.5	3.1	6.9	8SA-16-3-2	838	33	4.0	8.9

Contact your distributor for custom manifolds.

Design and specifications are subject to change without notice.
See page 19 for manifold testing and use.

Galvanic corrosion may occur in anodized aluminum components when installed in electrical connection with more noble metals such as copper. Use appropriate installation practices.

SMARTFLOW® 1-1/2" Aluminum Manifolds

Model Number (manifold only, see page 12 to add port valves, quick connects and flowmeters)

12SA - 16 - 4 - 2 - Y

Supply Threads

NPT	**12SA**
British Parallel	**12BSA**
British Taper	**12TSA**

Number of Ports

4 to 16

Port Sizes

3/8"NPT	**3**
3/8"BSPP	**3B**
3/8"BSPT	**3T**
1/2"NPT	**4**
1/2"BSPP	**4B**
1/2"BSPT	**4T**
*3/4"NPT	**6**
*3/4"BSPP	**6B**
*3/4"BSPT	**6T**

*76.2mm/3" port center spacing

Port Locations

0	Left Side
1	Left 45°
2	Center
3	Right 45°
4	Right Side

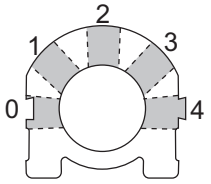

Color

Y	Red
Z	Blue

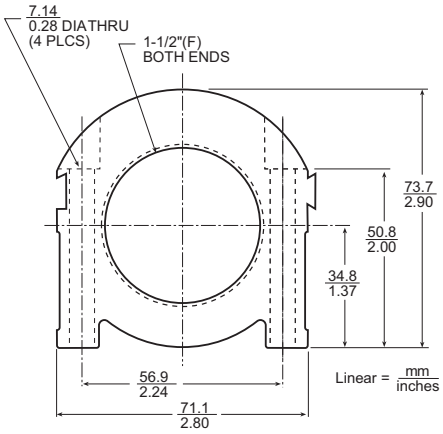

1-1/2" Manifold Profile

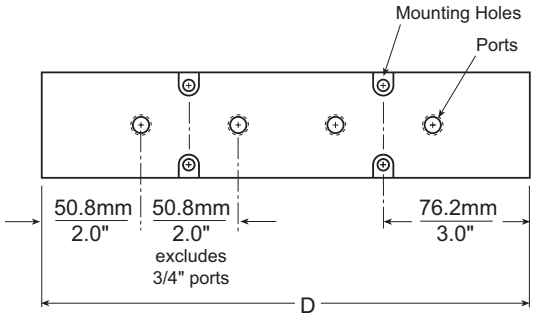

Stocked 1-1/2" Manifolds

Number of Ports	1/2" Ports				
	model number	length (**D**)		weight each	
		mm	in.	kg	lbs.
4	12SA-4-4-2	254	10	2.0	4.4
6	12SA-6-4-2	356	14	2.8	6.2
8	12SA-8-4-2	457	18	3.6	7.9
10	12SA-10-4-2	559	22	4.4	9.7
12	12SA-12-4-2	660	26	5.1	11.4
16	12SA-16-4-2	864	34	6.7	15.0

Contact your distributor for custom manifolds.

Design and specifications are subject to change without notice.
See page 19 for manifold testing and use.

Galvanic corrosion may occur in anodized aluminum components when installed in electrical connection with more noble metals such as copper. Use appropriate installation practices.

SMARTFLOW® 2" Aluminum Manifolds

Model Number (manifold only, see page 12 to add port valves, quick connects and flowmeters)

16SA - 16 - 4 - 2 - Y

Supply Threads

NPT	**16SA**
British Parallel	**16BSA**
British Taper	**16TSA**

Number of Ports

4 to 16

Port Sizes

4	1/2"NPT
4B	1/2"BSPP
4T	1/2"BSPT
6	*3/4"NPT
6B	*3/4"BSPP
6T	*3/4"BSPT
8	*1"NPT
8B	*1"BSPP
8T	*1"BSPT

*76.2mm/3" port center spacing

Color

Y	Red
Z	Blue

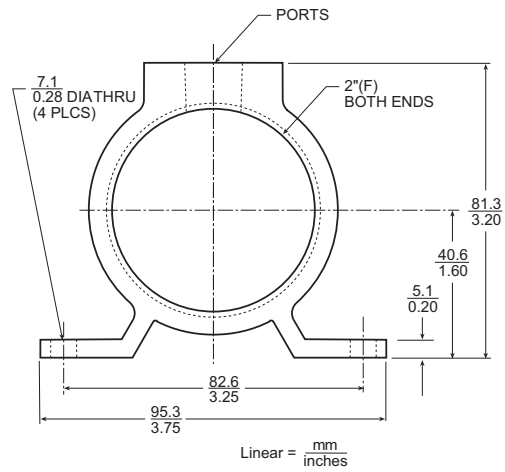

2" Manifold Profile
(ports located on the top surface only)

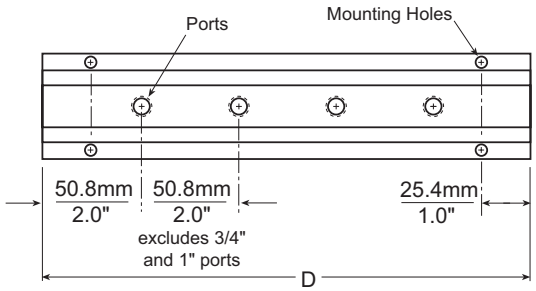

Stocked 2" Manifolds

Number of Ports	1/2" Ports				
	model number	length (**D**)		weight each	
		mm	in.	kg	lbs.
4	16SA-4-4-2	254	10	1.3	2.9
6	16SA-6-4-2	356	14	1.8	4.1
8	16SA-8-4-2	457	18	2.4	5.2
12	16SA-12-4-2	660	26	3.4	7.5
16	16SA-16-4-2	864	34	4.5	9.9

Contact your distributor for custom manifolds.

Design and specifications are subject to change without notice.
See page 19 for manifold testing and use.

Galvanic corrosion may occur in anodized aluminum components when installed in electrical connection with more noble metals such as copper. Use appropriate installation practices.

Aluminum and Stainless Steel Manifold Assemblies

Assembly Specification

The Smartflow manifold line is the platform to control and direct cooling water in many types of industrial process cooling. Flowmeters, Flow Regulators, Ball Valves, Quick Disconnect Fittings and more can be added to manifolds to improve functionality and process control. Individual cooling lines can be accurately controlled according to the demands of each circuit.

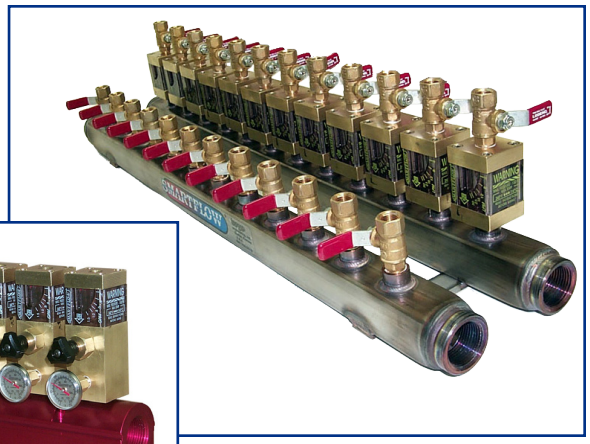

Parallel Stainless Steel Manifold Assemblies are built with flowmeters on one half of the manifold pair only. Contact the factory if alternate configuration is needed.

Burger & Brown Engineering recommends placing flowmeters and regulators on the return side of the cooling loop for best performance.

Model Number

Manifold P/N 8SA - 8 - 3 - 2 - Y - **F3-A-80** - B3Q3 - R

Aluminum or Stainless Steel Manifold Model Number from Pages 4 - 11

***Flowmeter/Regulator installed on each port of the manifold**

No additional flowmeter/regulator	**NA**
Mechanical Flowmeter	**F**
Brass Flow Regulator	**FR**
Delta-Q Precision Flow Regulator	**F-Q**
Tracer® Electronic Flowmeter	**DD**
Tracer$_{VM}$ Electronic Flowmeter	**VM**

***Consult Flowmeter Catalog Form #189 and Catalog Form #190**

Function

R	Return fluid flow entering the manifold (default)
S	Supply fluid flow exiting the manifold

Connection Type
Brass Valves and Fittings

NA	No addtional valve or fitting
B2	Ball Valve 1/4"NPT
B3	Ball Valve 3/8"NPT
B4	Ball Valve 1/2"NPT
H2	Hose Barb 1/4"ID Hose
H3	Hose Barb 3/8"ID Hose
H4	Hose Barb 1/2"ID Hose
Q2	Quick Connect Plug 1/4"ID (200 Series)
Q3	Quick Connect Plug 3/8"ID (300 Series)
Q4	Quick Connect Plug 1/2"ID (500 Series)

ManifoldBuilder

On-Line Part Number Specification Assistance

3D Native CAD files for manifolds and assemblies are available for download 24/7 at ***www.manifoldbuilder.com***